Ferroli

# COMPAT PLUS

## LARGE CAPACITY FAN COIL UNITS




TECHNICAL MANUAL

## INTRODUCTION

**COMPAT PLUS** series fan coils come in both the horizontal configurations (H) and in vertical configurations (V). The series includes 5 models with air-flows rates from 1,700 to 25,000 $m^3/h$.
The **COMPAT PLUS** series can be constructed with a single 2, 3, 4, or 6 row coil or in the double coil configurations for 4-pipe installations. Units in the series come complete with guard and safety micro- switch. The compact dimensions also allow installation in environments with connections to ducts or with direct delivery with plenum. The versatility offered by the series is topped off by an extensive range of accessories such as the cover for both configurations, the outlet plenum, the intake with fixed-louver grill, the air intake damper with or without or manual servo control and mixing chamber. This latter can be built with two dampers, one damper and one grill or two indoor and outdoor air-intake grids.
None of the **COMPAT PLUS** units are suitable for operation in explosive atmospheres.

## CONTENTS


| | | |
|---|---|---|
| 1. CONSTRUCTION FEATURES | page | 3 |
| 1.1 Models | " | 3 |
| 1.2 Structure | " | 3 |
| 1.3 Coils | " | 4 |
| 1.4 Fan-motor unit | " | 4 |
| 1.5 Transmission | " | 5 |
| 1.6 Safety systems | " | 5 |
| 1.7 Accessories available upon request | " | 5 |
| 2. TECHNICAL FEATURES | " | 7 |
| 2.1 Heating Performance | " | 8 |
| 2.2 Cooling Performance | " | 9 |
| 2.3 Possible Configurations | " | 10 |
| 2.4 Dimensions | " | 10 |

## 1. CONSTRUCTION FEATURES

The COMPAT PLUS series fan coil units are capable of satisfying all heating and cooling requirements in domestic and industrial settings due to their construction features.



*fig. 1*

### 1.1 Models

There are 9 models (from 1,700 to 25,000 $m^3$/h), in the (H) horizontal and (V) vertical configurations.

### 1.2 Structure

The single-units have a structure built of an extruded aluminium section and an internal galvanized sheet panel 23 mm thick and they are pre-painted on the outside, with internal mineral fiber or polyurethane insulation. Any variations such as the 50 mm thick panelling or construction with different materials (stainless steel sheet metal, peraluman etc.) will be quoted subject to specific request.

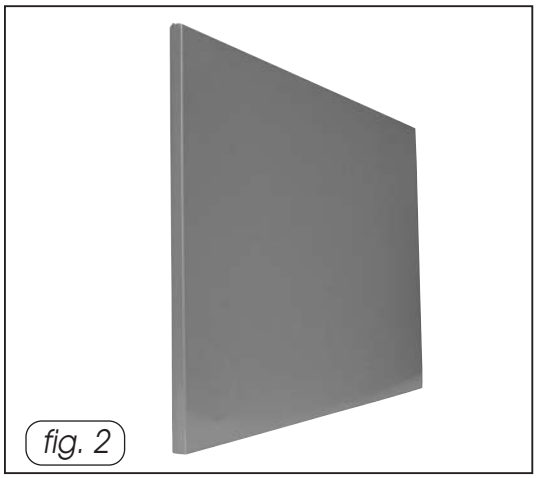

*fig. 2*

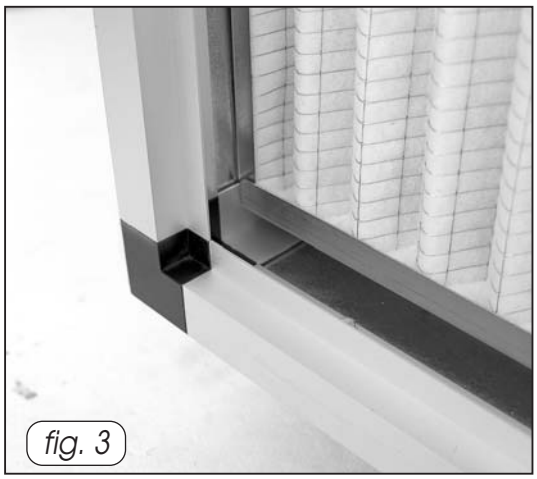

*fig. 3*

### 1.3 Coils

The heating and cooling coils are constructed with copper pipe and aluminum fins; the cooling coils are equipped with condensate collection trays and the corresponding drain. Upon request, coils may be made of materials and/or non-standard functions.



*fig. 4*

### 1.4 Fan-motor unit

The ventilated section mounts on a single dampened base, a double-suction centrifugal fan with forward-facing blades, complete with isolator joint at the outlet opening and a 1 or 2 speed asynchronous 3-phase 380V-50 Hz motor with protection level IP55 and class F winding , mounted on special belt-tightener slide.

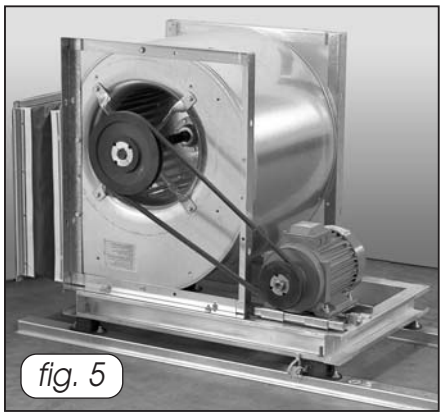

*fig. 5*

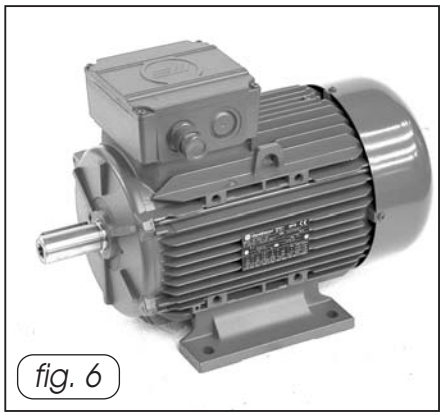

*fig. 6*

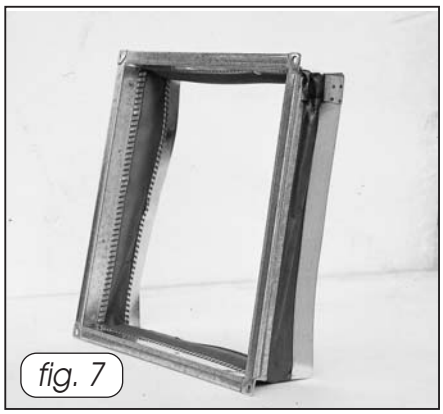

*fig. 7*

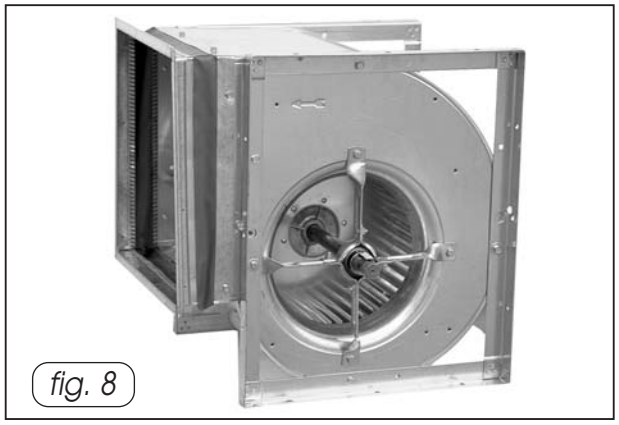

*fig. 8*

### 1.5 Transmission

The transmission is accomplished by way of belts and trapezoidal pulleys with conical sleeve bearing (may vary upon request) (fig. 9).

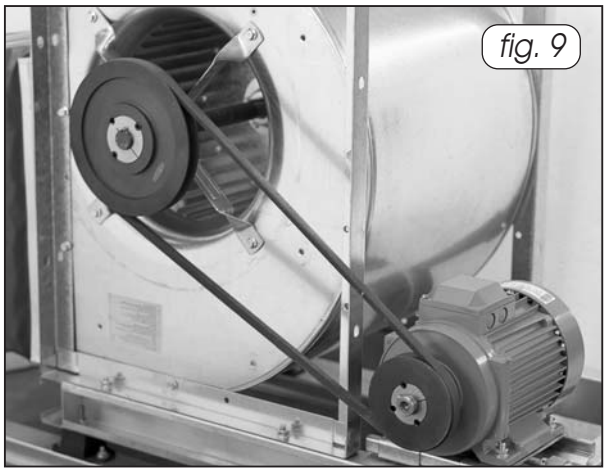
fig. 9

### 1.6 Safety systems

The micro safety switch (fig. 10) and protective grid (fig. 11) prevent accidents caused by tampering with moving parts.

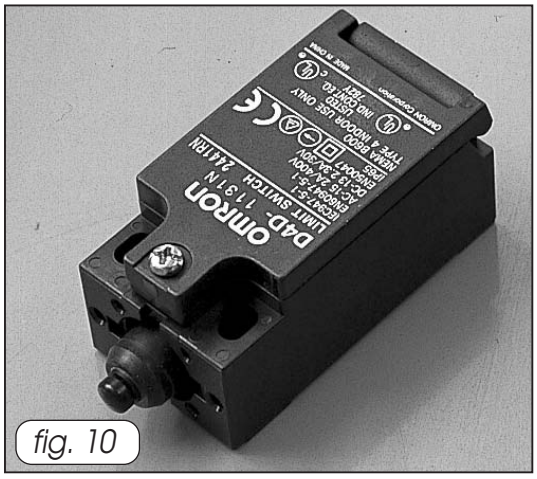

fig. 10

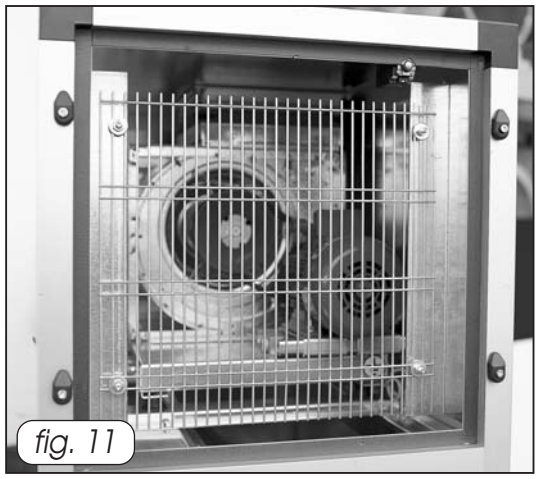
fig. 11

### 1.7 ACCESSORIES AVAILABLE UPON REQUEST:

- **SER** air intake complete with control damper with motor pin (fig. 12).
- **MIX** mixing chamber complete with control damper and motor pin (fig. 13).

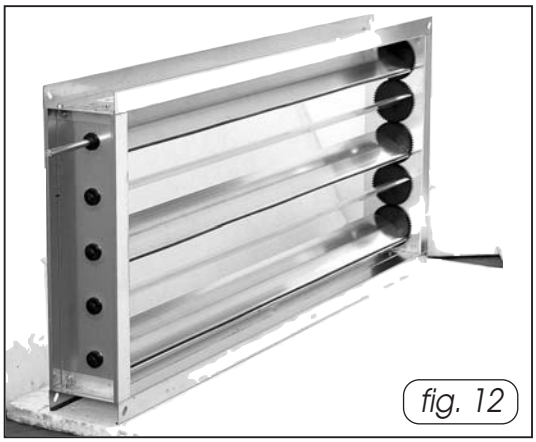
fig. 12

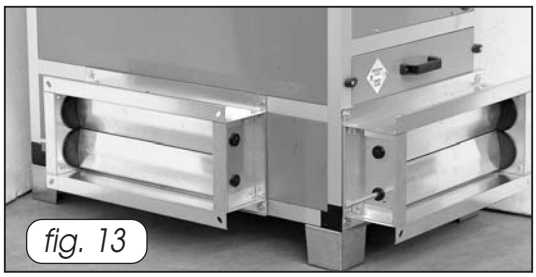
fig. 13

• **COS** manual control for damper (fig. 14).

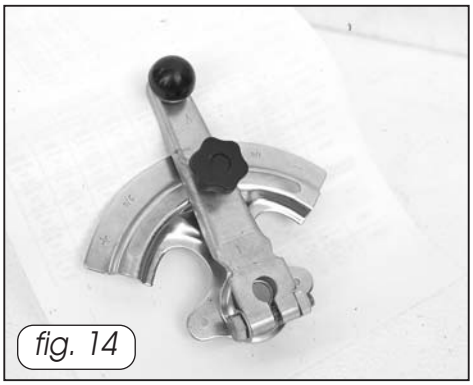

*fig. 14*

• **GRA** intake grill with fixed galvanized sheet louvers complete with bird-protection grid (fig. 15).

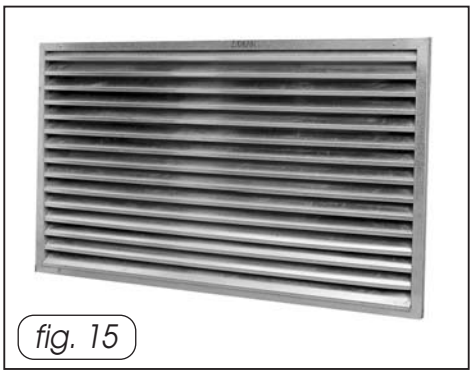

*fig. 15*

• **PMA** outlet plenum with two rows of adjustable aluminium louvers (fig. 16).

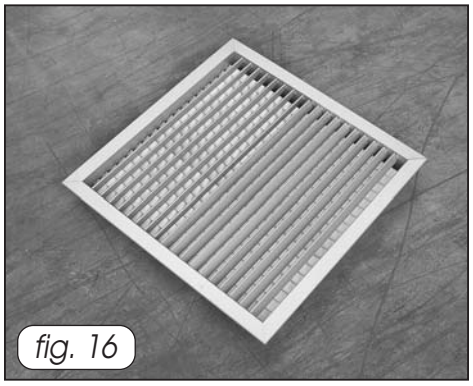

*fig. 16*

• **TEV** galvanized sheet rain cover for vertical units.
• **TEH** galvanized sheet rain cover for horizontal units (fig 17).



*fig. 17*

**Warning** - Other configurations or accessories not mentioned may be requested from our Engineering-Sales Department.

## 2. TECHNICAL FEATURES

| Unit Size | MU | 20 | 30 | 40 | 60 | 80 | 100 | 120 | 170 | 250 |
|---|---|---|---|---|---|---|---|---|---|---|
| Air flow | $m^3/h$ | 2.200 | 2.900 | 3.600 | 5.400 | 7.600 | 9.500 | 11.300 | 14.500 | 20.800 |
| **2-ROW COIL - Heating performance:** | | | | | | | | | | |
| Air T = -5°C | kW | 24,0 | 31,0 | 40,0 | 51,0 | 72,0 | 92,0 | 118,0 | 150,0 | 215,0 |
| Air T = 20°C | kW | 15,0 | 20,0 | 25,0 | 35,0 | 54,0 | 68,0 | 76,0 | 97,0 | 144,0 |
| available head | Pa | 70,0 | 70,0 | 70,0 | 70,0 | 70,0 | 70,0 | 70,0 | 70,0 | 70,0 |
| motor power input | kW | 0,37 | 0,37 | 0,55 | 1,10 | 1,10 | 1,10 | 2,20 | 2,20 | 3,00 |
| available head | Pa | 170,0 | 170,0 | 170,0 | 170,0 | 170,0 | 170,0 | 170,0 | 170,0 | 170,0 |
| motor power input | kW | 0,37 | 0,55 | 0,75 | 1,10 | 1,50 | 1,50 | 2,20 | 3,00 | 4,00 |
| available head | Pa | 270,0 | 270,0 | 270,0 | 270,0 | 270,0 | 270,0 | 270,0 | 270,0 | 270,0 |
| motor power input | kW | 0,55 | 0,75 | 1,10 | 1,50 | 2,20 | 2,20 | 3,00 | 4,00 | 5,50 |
| **3-ROW COIL - Heating performance:** | | | | | | | | | | |
| Air T = -5°C | kW | 33,0 | 45,0 | 55,0 | 77,0 | 108,0 | 137,0 | 157,0 | 201,0 | 288,0 |
| Air T = 20°C | kW | 20,0 | 28,0 | 34,0 | 51,0 | 72,0 | 93,0 | 103,0 | 132,0 | 194,0 |
| available head | Pa | 60,0 | 60,0 | 60,0 | 60,0 | 60,0 | 60,0 | 60,0 | 60,0 | 60,0 |
| motor power input | kW | 0,37 | 0,37 | 0,55 | 1,10 | 1,10 | 1,10 | 2,20 | 2,20 | 3,00 |
| available head | Pa | 160,0 | 160,0 | 160,0 | 160,0 | 160,0 | 160,0 | 160,0 | 160,0 | 160,0 |
| motor power input | kW | 0,37 | 0,55 | 0,75 | 1,10 | 1,50 | 1,50 | 2,20 | 3,00 | 4,00 |
| available head | Pa | 260,0 | 260,0 | 260,0 | 260,0 | 260,0 | 260,0 | 260,0 | 260,0 | 260,0 |
| motor power input | kW | 0,55 | 0,75 | 1,10 | 1,50 | 2,20 | 2,20 | 3,00 | 4,00 | 5,50 |
| **4-ROW COIL - Heating performance:** | | | | | | | | | | |
| Air T = -5°C | kW | 40,0 | 53,0 | 67,0 | 99,0 | 139,0 | 168,0 | 203,0 | 261,0 | 378,0 |
| Air T = 20°C | kW | 28,0 | 37,0 | 45,0 | 67,0 | 94,0 | 119,0 | 144,0 | 185,0 | 255,0 |
| **4-ROW COIL - Cooling performance:** | | | | | | | | | | |
| Air T = 27°C 48% U.R. | kW | 10,0 | 13,0 | 14,0 | 21,0 | 29,0 | 39,0 | 52,0 | 67,0 | 98,0 |
| Air T = 32°C 45% U.R. | kW | 15,0 | 17,0 | 23,0 | 35,0 | 49,0 | 67,0 | 81,0 | 124,0 | 156,0 |
| available head | Pa | 55,0 | 55,0 | 55,0 | 55,0 | 55,0 | 55,0 | 55,0 | 55,0 | 55,0 |
| motor power input | kW | 0,37 | 0,37 | 0,55 | 1,10 | 1,10 | 1,10 | 2,20 | 2,20 | 3,00 |
| available head | Pa | 155,0 | 155,0 | 155,0 | 155,0 | 155,0 | 155,0 | 155,0 | 155,0 | 155,0 |
| motor power input | kW | 0,37 | 0,55 | 0,75 | 1,10 | 1,50 | 1,50 | 2,20 | 3,00 | 4,00 |
| available head | Pa | 255,0 | 255,0 | 255,0 | 255,0 | 255,0 | 255,0 | 255,0 | 255,0 | 255,0 |
| motor power input | kW | 0,55 | 0,75 | 1,10 | 1,50 | 2,20 | 2,20 | 3,00 | 4,00 | 5,50 |
| **6-ROW COIL - Cooling performance:** | | | | | | | | | | |
| Air T = 27°C 48% U.R. | kW | 12,0 | 16,0 | 21,0 | 26,0 | 41,0 | 51,0 | 64,0 | 82,0 | 123,0 |
| Air T = 32°C 45% U.R. | kW | 18,0 | 25,0 | 31,0 | 44,0 | 65,0 | 83,0 | 102,0 | 131,0 | 196,0 |
| available head | Pa | 40,0 | 40,0 | 40,0 | 40,0 | 40,0 | 40,0 | 40,0 | 40,0 | 40,0 |
| motor power input | kW | 0,37 | 0,37 | 0,55 | 1,10 | 1,10 | 1,10 | 2,20 | 2,20 | 3,00 |
| available head | Pa | 140,0 | 140,0 | 140,0 | 140,0 | 140,0 | 140,0 | 140,0 | 140,0 | 140,0 |
| motor power input | kW | 0,37 | 0,55 | 0,75 | 1,10 | 1,50 | 1,50 | 2,20 | 3,00 | 4,00 |
| available head | Pa | 240,0 | 240,0 | 240,0 | 240,0 | 240,0 | 240,0 | 240,0 | 240,0 | 240,0 |
| motor power input | kW | 0,55 | 0,75 | 1,10 | 1,50 | 2,20 | 2,20 | 3,00 | 4,00 | 5,50 |

*NOTES: The Air-flow rate refer to a speed of 2.5 m/s across the coil.*
*For greater air-flow rates or solutions with double coil for four pipe installations, contact our engineering-sales department.*

## 2.1 Heating Performance

| MODEL | Air Speed | Nominal Flow rate | Rows | Inlet air Temperature: -5°C | | | Inlet air Temperature: 20°C | | |
|---|---|---|---|---|---|---|---|---|---|
| | **m/sec** | **m³/h** | **No.** | **T.exh.°C** | **kW** | **kcal/h** | **T.exh.°C** | **kW** | **kcal/h** |
| **COMPAT PLUS 20** | 2,5 | 2.200 | 2 | 24 | 24 | 20.300 | 41 | 15 | 13.300 |
| | | | 3 | 36 | 33 | 28.600 | 48 | 20 | 17.500 |
| | 2,75 | 2.400 | 2 | 23 | 25 | 21.400 | 40 | 16 | 14.150 |
| | | | 3 | 35 | 35 | 30.200 | 47 | 22 | 18.600 |
| | 3 | 2.600 | 2 | 22 | 26 | 22.300 | 39 | 17 | 14.200 |
| | | | 3 | 34 | 37 | 31.900 | 46 | 23 | 19.700 |
| **COMPAT PLUS 30** | 2,5 | 2.900 | 2 | 24 | 31 | 26.500 | 41 | 20 | 17.500 |
| | | | 3 | 37 | 45 | 38.300 | 48 | 28 | 23.700 |
| | 2,75 | 3.200 | 2 | 23 | 33 | 28.200 | 40 | 22 | 18.500 |
| | | | 3 | 36 | 48 | 41.000 | 47 | 29 | 25.200 |
| | 3 | 3.500 | 2 | 22 | 34 | 29.600 | 39 | 23 | 19.500 |
| | | | 3 | 34 | 50 | 43.400 | 46 | 31 | 26.800 |
| **COMPAT PLUS 40** | 2,5 | 3.600 | 2 | 25 | 40 | 34.500 | 41 | 25 | 21.900 |
| | | | 3 | 37 | 55 | 47.500 | 48 | 34 | 29.600 |
| | 2,75 | 4.000 | 2 | 24 | 43 | 37.000 | 40 | 27 | 23.300 |
| | | | 3 | 35 | 59 | 51.000 | 47 | 37 | 31.900 |
| | 3 | 4.400 | 2 | 23 | 45 | 38.600 | 39 | 28 | 24.300 |
| | | | 3 | 34 | 62 | 53.400 | 47 | 39 | 33.600 |
| **COMPAT PLUS 60** | 2,5 | 5.400 | 2 | 23 | 51 | 43.970 | 39 | 35 | 29.900 |
| | | | 3 | 37 | 77 | 65.800 | 48 | 51 | 44.200 |
| | 2,75 | 5.900 | 2 | 22 | 54 | 46.270 | 38 | 36 | 31.100 |
| | | | 3 | 36 | 82 | 70.500 | 47 | 54 | 46.500 |
| | 3 | 6.500 | 2 | 20 | 55 | 47.640 | 37 | 38 | 32.400 |
| | | | 3 | 34 | 86 | 74.000 | 46 | 57 | 49.400 |
| **COMPAT PLUS 80** | 2,5 | 7.600 | 2 | 23 | 72 | 61.900 | 41 | 54 | 46.800 |
| | | | 3 | 36 | 108 | 92.500 | 48 | 72 | 62.300 |
| | 2,75 | 8.300 | 2 | 22 | 76 | 65.100 | 40 | 55 | 47.700 |
| | | | 3 | 36 | 115 | 99.200 | 47 | 76 | 65.500 |
| | 3 | 9.100 | 2 | 20 | 78 | 66.690 | 39 | 59 | 50.400 |
| | | | 3 | 34 | 120 | 103.600 | 46 | 80 | 69.100 |
| **COMPAT PLUS 100** | 2,5 | 9.500 | 2 | 23 | 92 | 78.800 | 41 | 68 | 58.500 |
| | | | 3 | 37 | 137 | 117.800 | 49 | 93 | 80.200 |
| | 2,75 | 10.400 | 2 | 22 | 97 | 83.000 | 40 | 71 | 61.000 |
| | | | 3 | 36 | 145 | 124.300 | 47 | 97 | 83.500 |
| | 3 | 11.300 | 2 | 22 | 103 | 88.600 | 39 | 74 | 63.750 |
| | | | 3 | 34 | 150 | 128.700 | 46 | 102 | 87.400 |
| **COMPAT PLUS 120** | 2,5 | 11.300 | 2 | 25 | 118 | 102.200 | 40 | 76 | 66.180 |
| | | | 3 | 35 | 157 | 135.000 | 46 | 103 | 89.000 |
| | 2,75 | 12.400 | 2 | 23 | 121 | 104.800 | 39 | 81 | 69.900 |
| | | | 3 | 33 | 164 | 141.100 | 45 | 109 | 94.100 |
| | 3 | 13.600 | 2 | 22 | 128 | 110.700 | 38 | 84 | 73.000 |
| | | | 3 | 32 | 173 | 149.000 | 44 | 114 | 98.300 |
| **COMPAT PLUS 170** | 2,5 | 14.500 | 2 | 25 | 150 | 129.000 | 39 | 97 | 84.000 |
| | | | 3 | 35 | 201 | 173.000 | 46 | 132 | 114.000 |
| | 2,75 | 16.000 | 2 | 23 | 157 | 135.000 | 38 | 102 | 88.000 |
| | | | 3 | 33 | 211 | 182.000 | 45 | 140 | 121.000 |
| | 3 | 17.500 | 2 | 22 | 165 | 142.000 | 38 | 108 | 93.000 |
| | | | 3 | 32 | 223 | 192.000 | 44 | 146 | 126.000 |
| **COMPAT PLUS 250** | 2,5 | 20.800 | 2 | 25 | 215 | 185.000 | 40 | 144 | 124.000 |
| | | | 3 | 35 | 288 | 248.000 | 47 | 194 | 167.000 |
| | 2,75 | 22.800 | 2 | 24 | 231 | 199.000 | 39 | 150 | 129.000 |
| | | | 3 | 34 | 306 | 264.000 | 46 | 204 | 176.000 |
| | 3 | 25.000 | 2 | 22 | 236 | 203.000 | 38 | 161 | 139.000 |
| | | | 3 | 32 | 324 | 279.000 | 45 | 219 | 189.000 |

*Performance for an inlet water temperature of: 80°C and outlet temperate 70°C*
*Water pressure drop < 24,5 kPa*

## 2.2 Cooling Performance

| MODEL | Air Speed | Nominal Flow rate | Rows | Inlet air Temperature: 27°C 48% R.H | | | Inlet air Temperature: 32°C 45% R.H. | | |
|---|---|---|---|---|---|---|---|---|---|
| | **m/sec** | **m³/h** | **No.** | **T.exh.°C** | **kW** | **kcal/h** | **T.exh.°C** | **kW** | **kcal/h** |
| **COMPAT PLUS 20** | 2 | 1.700 | 4 | 17-79 | 8 | 6.650 | 18-77 | 12 | 10.600 |
| | | | 6 | 13,5-92 | 11 | 9.660 | 15-85 | 15 | 12.800 |
| | 2,5 | 2.200 | 4 | 17,5-78 | 10 | 8.250 | 19-74 | 15 | 12.500 |
| | | | 6 | 14-90 | 12 | 10.650 | 16,5-80 | 18 | 15.100 |
| | 2,75 | 2.400 | 4 | 18-77 | 10 | 8.550 | 19,5-73 | 15 | 13.150 |
| | | | 6 | 15-85 | 15 | 12.600 | 17-79 | 19 | 16.100 |
| **COMPAT PLUS 30** | 2 | 2.300 | 4 | 16-81 | 12 | 9.990 | 19-74 | 15 | 12.900 |
| | | | 6 | 14-90 | 14 | 12.400 | 15-85 | 21 | 17.800 |
| | 2,5 | 2.900 | 4 | 17-79 | 13 | 10.800 | 20-72 | 17 | 15.000 |
| | | | 6 | 15-85 | 16 | 13.530 | 15,5-84 | 25 | 21.250 |
| | 2,75 | 3.200 | 4 | 17,5-78 | 14 | 12.050 | 20,5-71 | 18 | 15.700 |
| | | | 6 | 15,5-84 | 17 | 14.650 | 14-90 | 26 | 22.700 |
| **COMPAT PLUS 40** | 2 | 2.900 | 4 | 17-79 | 13 | 11.200 | 18,5-76 | 20 | 17.100 |
| | | | 6 | 13,5-92 | 19 | 16.200 | 14-90 | 28 | 23.800 |
| | 2,5 | 3.600 | 4 | 18-77 | 14 | 12.200 | 19-74 | 23 | 19.700 |
| | | | 6 | 14,5-87 | 21 | 18.050 | 15,5-84 | 31 | 27.050 |
| | 2,75 | 4.000 | 4 | 18,5-76 | 15 | 12.700 | 19,5-73 | 25 | 21.100 |
| | | | 6 | 15-85 | 22 | 19.300 | 16-81 | 34 | 29.200 |
| **COMPAT PLUS 60** | 2,3 | 5.000 | 4 | 17-79 | 20 | 17.000 | 19-74 | 34 | 29.000 |
| | | | 6 | 15-85 | 26 | 22.100 | 16-81 | 42 | 36.500 |
| | 2,5 | 5.400 | 4 | 17,5-78 | 21 | 17.700 | 19-74 | 35 | 30.200 |
| | | | 6 | 15,5-84 | 26 | 22.700 | 16,5-80 | 44 | 38.000 |
| | 2,75 | 5.900 | 4 | 18-77 | 22 | 18.960 | 19,5-73 | 38 | 32.320 |
| | | | 6 | 15,5-84 | 28 | 23.900 | 17-79 | 46 | 39.950 |
| **COMPAT PLUS 80** | 2,3 | 7.000 | 4 | 17,5-78 | 28 | 23.800 | 19-74 | 47 | 40.600 |
| | | | 6 | 14,5-87 | 41 | 35.000 | 15-85 | 65 | 55.700 |
| | 2,5 | 7.600 | 4 | 17,5-78 | 29 | 24.900 | 19,5-73 | 49 | 42.500 |
| | | | 6 | 14,5-87 | 41 | 35.000 | 15,5-84 | 65 | 55.700 |
| | 2,75 | 8.300 | 4 | 18-77 | 31 | 26.700 | 19,5-73 | 53 | 45.500 |
| | | | 6 | 15-85 | 46 | 39.500 | 16-81 | 73 | 62.400 |
| **COMPAT PLUS 100** | 2,3 | 8.700 | 4 | 17-79 | 38 | 32.250 | 18,5-76 | 63 | 54.000 |
| | | | 6 | 14,5-87 | 48 | 41.400 | 15,5-84 | 78 | 66.700 |
| | 2,5 | 9.500 | 4 | 17,5-78 | 39 | 33.920 | 19-74 | 67 | 57.900 |
| | | | 6 | 15-85 | 51 | 43.500 | 16-81 | 83 | 71.400 |
| | 2,75 | 10.400 | 4 | 17,5-78 | 43 | 37.200 | 19,5-73 | 69 | 59.200 |
| | | | 6 | 15,5-84 | 53 | 45.900 | 16,5-80 | 88 | 75.900 |
| **COMPAT PLUS 120** | 2,3 | 10.400 | 4 | 17-80 | 48 | 41.240 | 18,5-78,5 | 78 | 66.900 |
| | | | 6 | 14,5-88 | 61 | 52.800 | 15,5-86,5 | 96 | 82.600 |
| | 2,5 | 11.300 | 4 | 17-79 | 52 | 44.800 | 19-77,5 | 81 | 70.000 |
| | | | 6 | 15-87 | 64 | 55.300 | 15,5-86 | 102 | 88.100 |
| | 2,75 | 12.400 | 4 | 17,5-78 | 53 | 45.900 | 19-76,5 | 87 | 75.400 |
| | | | 6 | 15-86 | 68 | 58.900 | 16-85 | 108 | 93.170 |
| **COMPAT PLUS 170** | 2,3 | 13.400 | 4 | 17-80 | 61 | 53.100 | 18,5-78,5 | 100 | 86.300 |
| | | | 6 | 14,5-88 | 79 | 68.100 | 15,5-86,5 | 124 | 106.500 |
| | 2,5 | 14.500 | 4 | 17-79 | 67 | 57.500 | 19-77,5 | 124 | 89.900 |
| | | | 6 | 15-87 | 82 | 71.000 | 15,5-86 | 131 | 113.100 |
| | 2,75 | 16.000 | 4 | 17,5-78 | 69 | 59.300 | 19-76,5 | 113 | 97.300 |
| | | | 6 | 15-86 | 88 | 76.000 | 16-84,5 | 139 | 120.200 |
| **COMPAT PLUS 250** | 2,3 | 19.100 | 4 | 16,5-80 | 93 | 80.100 | 18-78,5 | 150 | 129.100 |
| | | | 6 | 14-88 | 117 | 100.800 | 15-87 | 185 | 159.400 |
| | 2,5 | 20.800 | 4 | 17-79 | 98 | 84.000 | 18,5-77,5 | 156 | 133.900 |
| | | | 6 | 14,5-87 | 123 | 105.700 | 15,5-86 | 196 | 168.500 |
| | 2,75 | 22.800 | 4 | 17-78 | 105 | 90.400 | 19-76,5 | 164 | 141.400 |
| | | | 6 | 15-86 | 132 | 113.700 | 16-85 | 207 | 177.900 |

*Performance for an inlet water temperature of: 7°C and outlet temperature 12°C*
*Water pressure drop < 29,4 kPa*

## 2.3 POSSIBLE CONFIGURATIONS

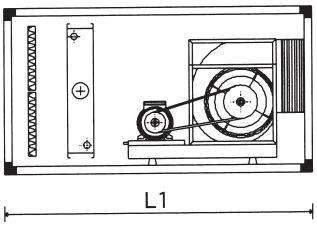


**H1 Version**
with single heating coil

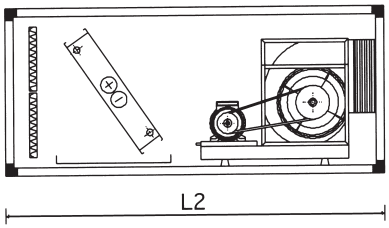


**H2 Version**
with single heating and cooling coil

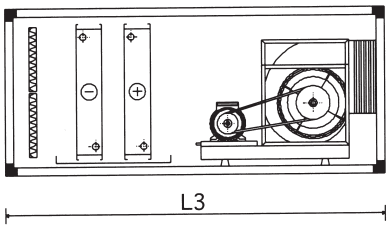


**H3 Version**
with heating coil and cooling coil

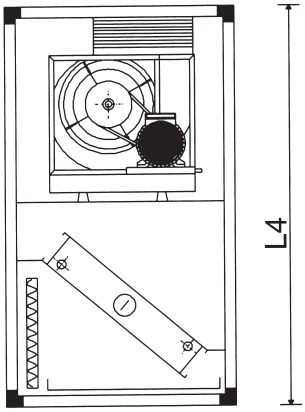


**V1 Version**
with single heating and cooling coil

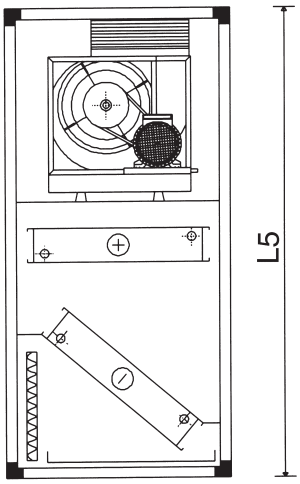


**V2 Version**
with heating coil and cooling coil

## 2.4 DIMENSIONS

| MODEL | A | B | C | D | E | F | G | L1 | L2 | L3 | L4 | L5 |
|---|---|---|---|---|---|---|---|---|---|---|---|---|
| **COMPAT PLUS 20** | 600 | 790 | 232 | 261 | 110 | 250 | 500 | 1.290 | 1.540 | 1.540 | 1.540 | 1.790 |
| **COMPAT PLUS 30** | 600 | 1.040 | 298 | 261 | 110 | 250 | 500 | 1.290 | 1.540 | 1.540 | 1.540 | 1.790 |
| **COMPAT PLUS 40** | 650 | 1.290 | 331 | 289 | 110 | 250 | 500 | 1.290 | 1.540 | 1.540 | 1.540 | 1.790 |
| **COMPAT PLUS 60** | 790 | 1.290 | 395 | 342 | 110 | 500 | 750 | 1.540 | 1.790 | 1.790 | 1.790 | 2.040 |
| **COMPAT PLUS 80** | 1.040 | 1.290 | 474 | 404 | 110 | 500 | 750 | 1.540 | 1.790 | 1.790 | 1.790 | 2.040 |
| **COMPAT PLUS 100** | 1.040 | 1.540 | 557 | 480 | 110 | 500 | 1.000 | 1.790 | 2.040 | 2.040 | 2.040 | 2.290 |
| **COMPAT PLUS 120** | 1.040 | 1.790 | 570 | 570 | 110 | 500 | 750 | 1.790 | 2.040 | 2.040 | 2.040 | 2.290 |
| **COMPAT PLUS 170** | 1.290 | 1.790 | 715 | 715 | 110 | 750 | 1.000 | 2.040 | 2.540 | 2.540 | 2.290 | 2.540 |
| **COMPAT PLUS 250** | 1.540 | 2.040 | 800 | 800 | 110 | 750 | 1.000 | 2.290 | 2.790 | 2.790 | 2.540 | 2.790 |

## Horizontal unit (H)

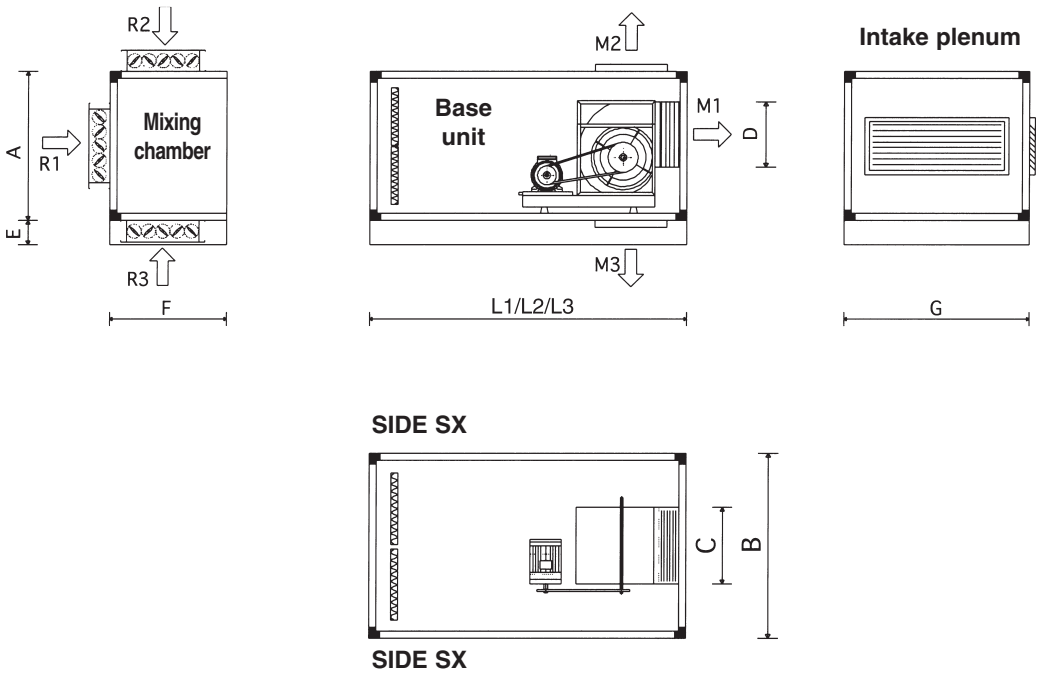


## Vertical unit (V)

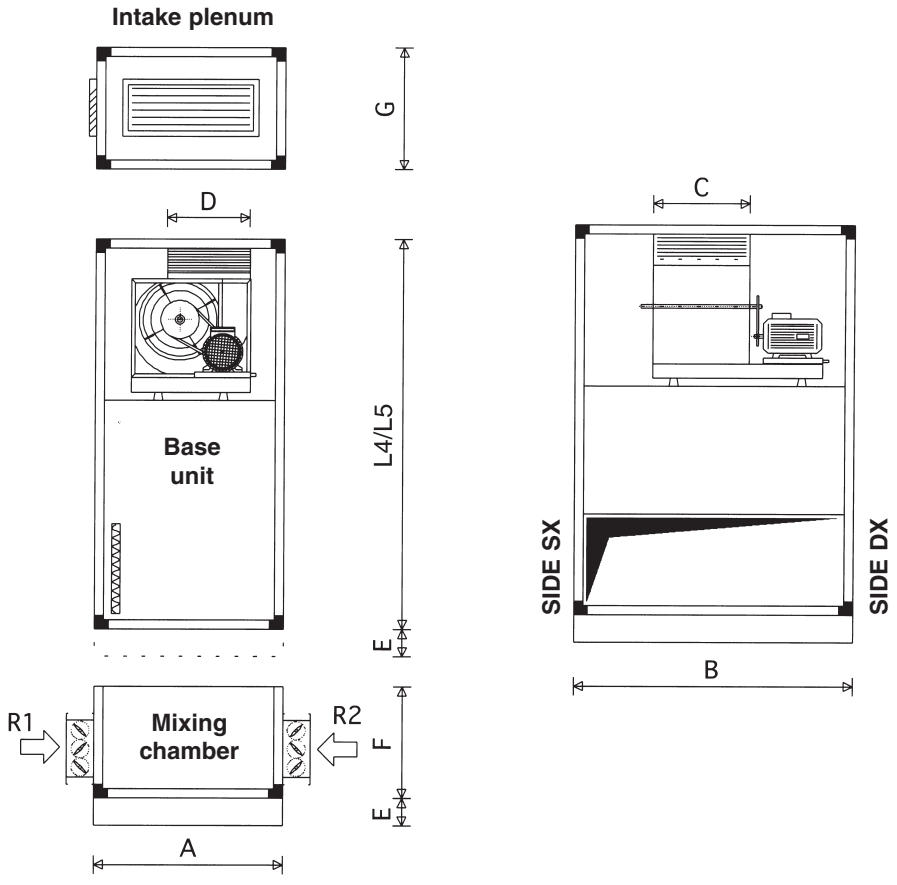

Ferroli

## NOTE TO SALES REPRESENTATIVES

In an effort to constantly improve our range of products, with the aim of increasing the level of customer satisfaction, we would like to inform you that the appearance, dimensions, technical data, and accessories of our products may be subject to change.

Therefore, the utmost care must be taken to ensure that all technical and/or sales documents (price lists, catalogues, brochures, etc.) provided to the end client are completely up to date.

cod. 89NG6002/00 - 10.2006

GRUPPO FERROLI

**Ferroli spa** ¬ 37047 San Bonifacio (Verona) Italy ¬ Via Ritonda 78/A
tel. +39.045.6139411 ¬ fax +39.045.6100233
**www.gruppoferroli.com ¬ e-mail: export@ferroli.it**